# COMPOSITE MANHOLE-WATER TIGHT-LOCKING

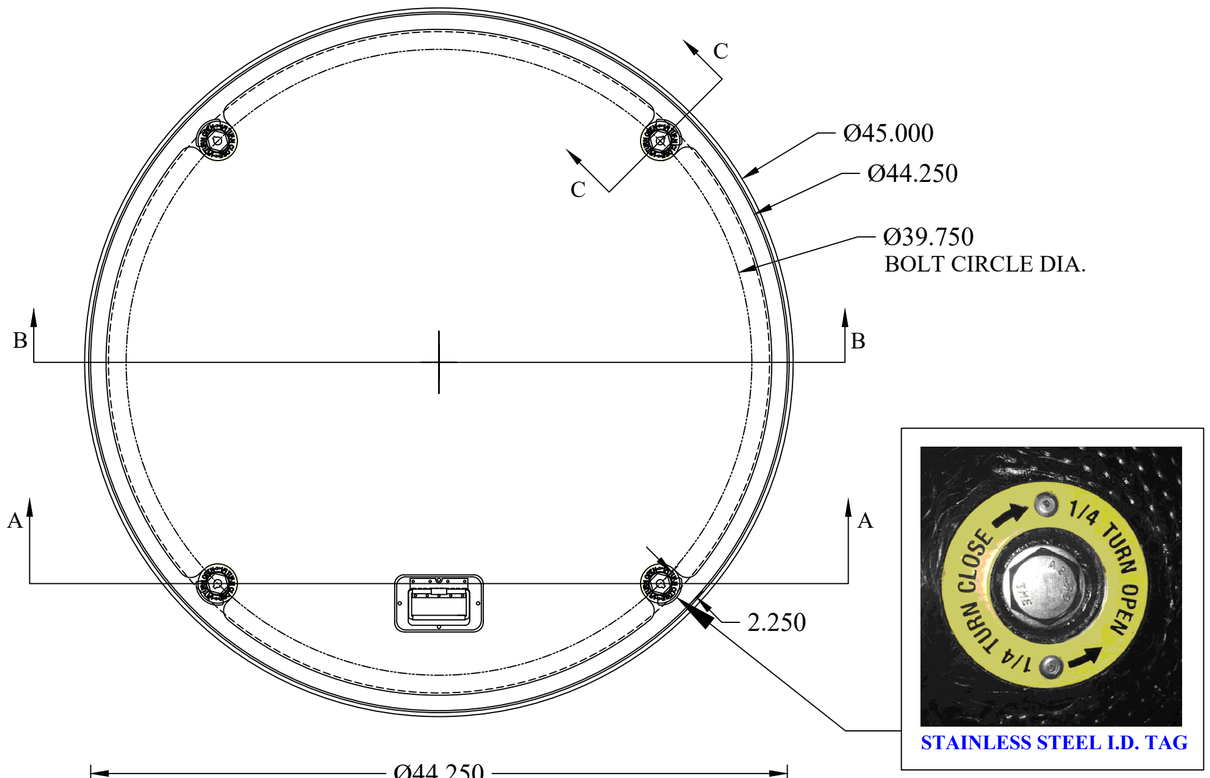


**FEATURES:**

- COMPOSITE COVER RATED FOR H-20 TRUCK LOADS
- 14 GAUGE STEEL SKIRT
- STAINLESS STEEL RECESSED WATER-TIGHT LIFTING HANDLE FOR EASY REMOVAL
- FOUR (4) CAM LOCKS WITH I.D. TAG AND
- 1/8" BUNA-N GASKET
- CHANNEL-STYLE CONCRETE ANCHORS
- ALL STEEL IS COATED WITH A RUST-PREVENTIVE PAINT.
- MADE IN USA

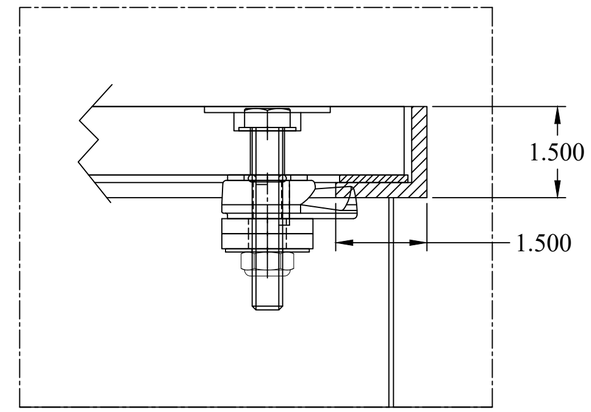


SECTION C-C

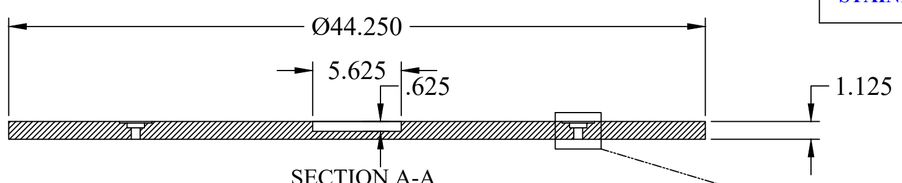


SECTION A-A
(LOCK CAM NOT SHOWN)
COMPOSITE COVER

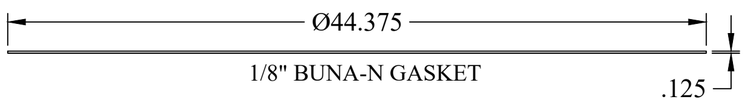


1/8" BUNA-N GASKET

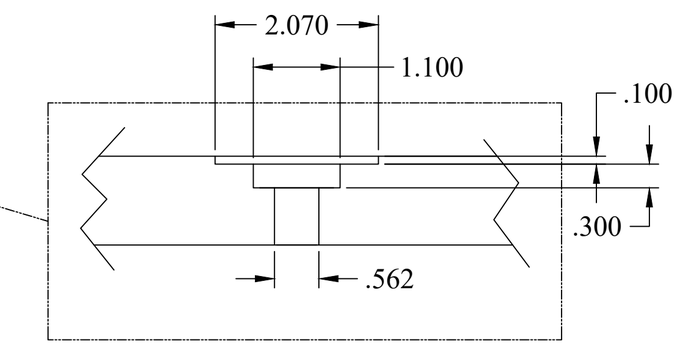


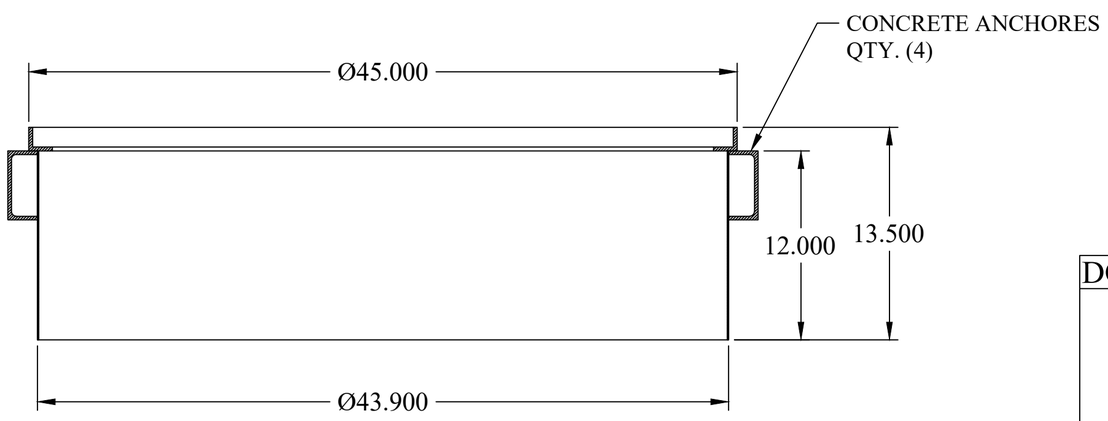


SECTION B-B
(COVER NOT SHOWN)

This document is proprietary and confidential. No part of this document may be disclosed in any manner to a third party without the prior written consent of Fairfield Industries

DO NOT SCALE DRAWING

UNLESS OTHERWISE SPECIFIED, DIMENSIONS ARE IN INCHES.

TOLERANCES ON ANGLES: ± 1°
FRACTIONAL: ±1/64
2-PLACE DECIMALS: ± 0.05
3-PLACE DECIMALS: ± 0.005

THIRD ANGLE PROJECTION

FAIRFIELD INDUSTRIES, INC
4483 CHOPPEE ROAD, GEORGETOWN SC 29440
PHONE: 843-461-3894 FAX: 843-461-3907

| DESCRIPTION | | | | |
|---|---|---|---|---|
| 440-WTLC | | | | |
| SIZE | SCALE | DWG. NO | C.REV | REV |
| C | NTS | S032717-1 | - | 1 |
| DRAWN BY | | DATE | SHT | |
| S BESHORE | | 03/27/17 | 1 OF 1 | |