FRONT VIEW
DOOR CLOSED

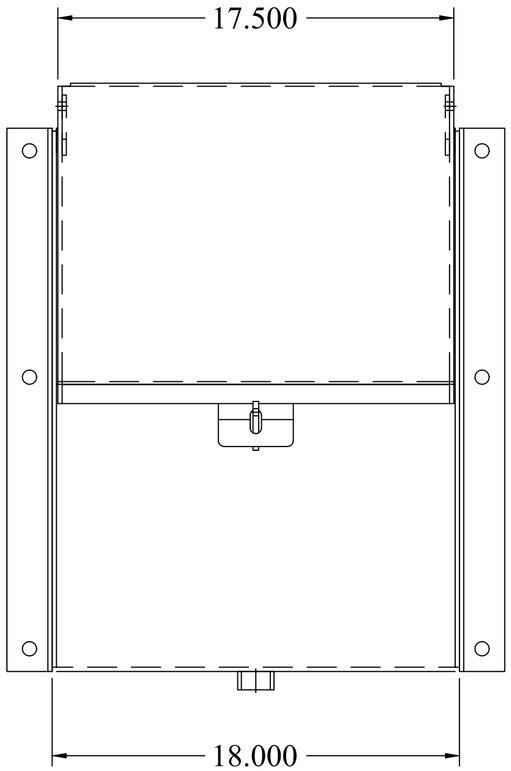

DOOR OPEN

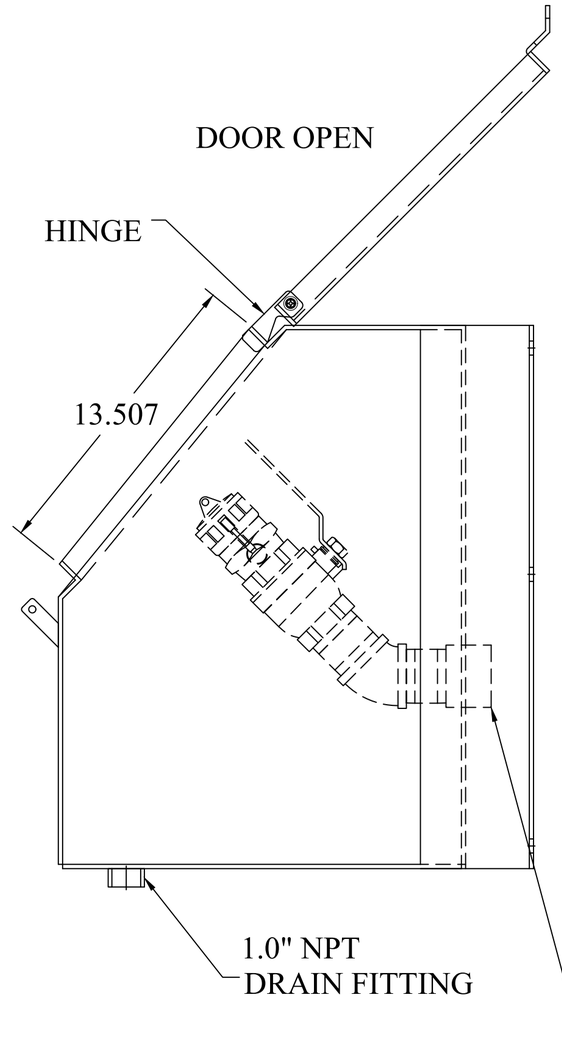

DOOR CLOSED

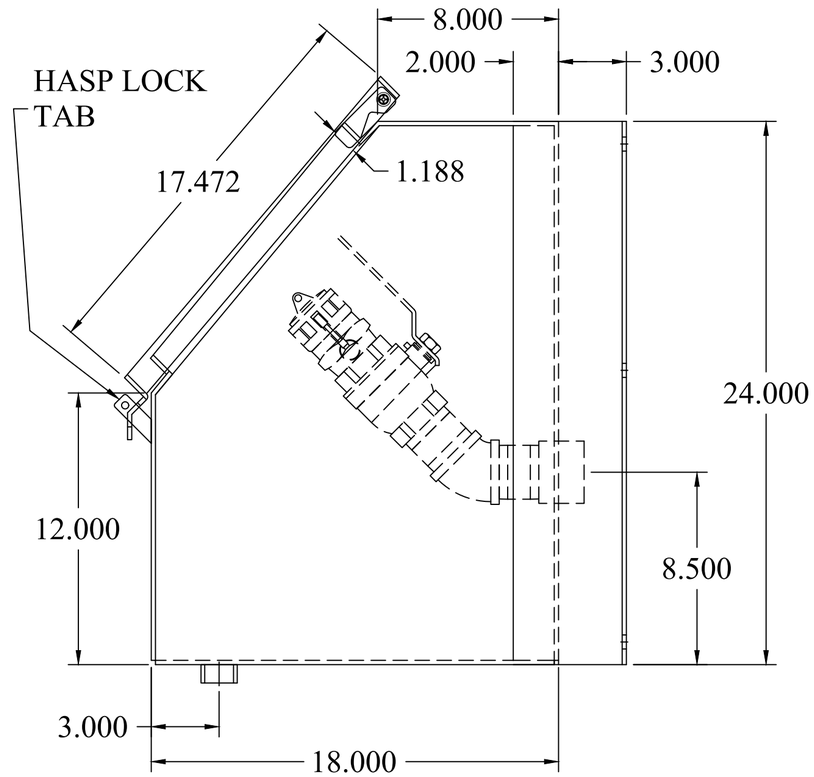

FRONT VIEW
DOOR REMOVED

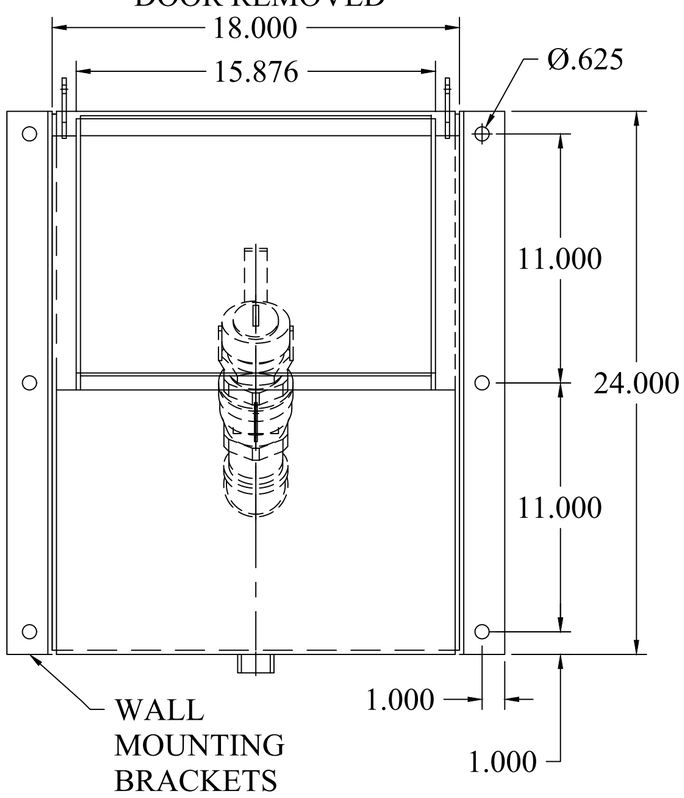

FEATURES:

- 7 GA. 316L STAINLESS STEEL ALL WELDED CONSTRUCTION
- 7 GA. 316L STAINLESS STEEL LOCKABLE HINGED DOOR
- ONE (1) 2" CONDUIT COUPLING (PIPING NOT INCLUDED)
- 7 GA. 316L STAINLESS STEEL WALL MOUNTING BRACKETS
- 1.0" NPT DRAIN FITTING
- MADE IN USA

This document is proprietary and confidential. No part of this document may be disclosed in any manner to a third party without the prior written consent of Fairfield Industries

DO NOT SCALE DRAWING

UNLESS OTHERWISE SPECIFIED, DIMENSIONS ARE IN INCHES.

TOLERANCES ON ANGLES: ± 1°
FRACTIONAL: ±1/64
2-PLACE DECIMALS: ± 0.05
3-PLACE DECIMALS: ± 0.005

THIRD ANGLE PROJECTION

FAIRFIELD INDUSTRIES, INC
4483 CHOPPEE ROAD, GEORGETOWN SC 29440
PHONE: 843-461-3894 FAX: 843-461-3907

DESCRIPTION				
CS18-24				
SIZE	SCALE	DWG. NO	C.REV	REV
C	NTS	D080921-2	-	1
DRAWN BY		DATE	SHT	
D. NETTLES		08/09/21	1 OF 3	